PERFORMANCE BUILDING SUPPLY
NORTHEAST PERFORMANCE WINDOWS
11 1 FOX STREET, PORTLAND, MAINE 04101
207.780.1500 • 207.780.1510 FAX
INFO@PERFORMANCEBUILINGSUPPLY.COM
WWW.NORTHEASTPERFORMANCEWINDOWS.COM
INTUS WINDOWS

Intus Flange Options

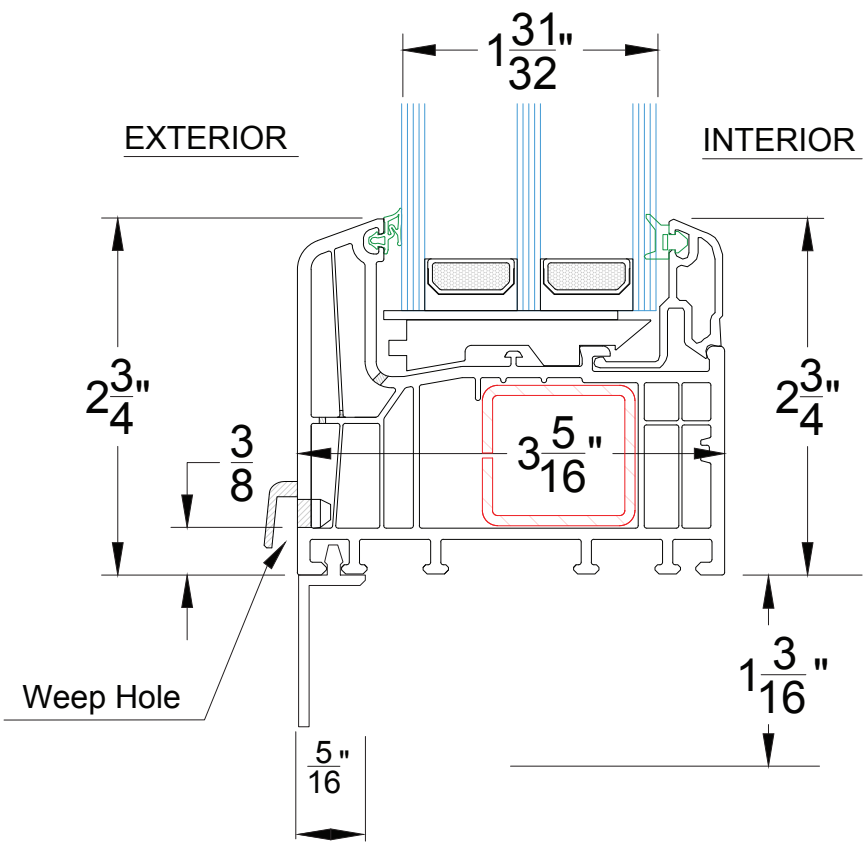

INTUS EFORTE WINDOW
WITH UST8 FLANGE

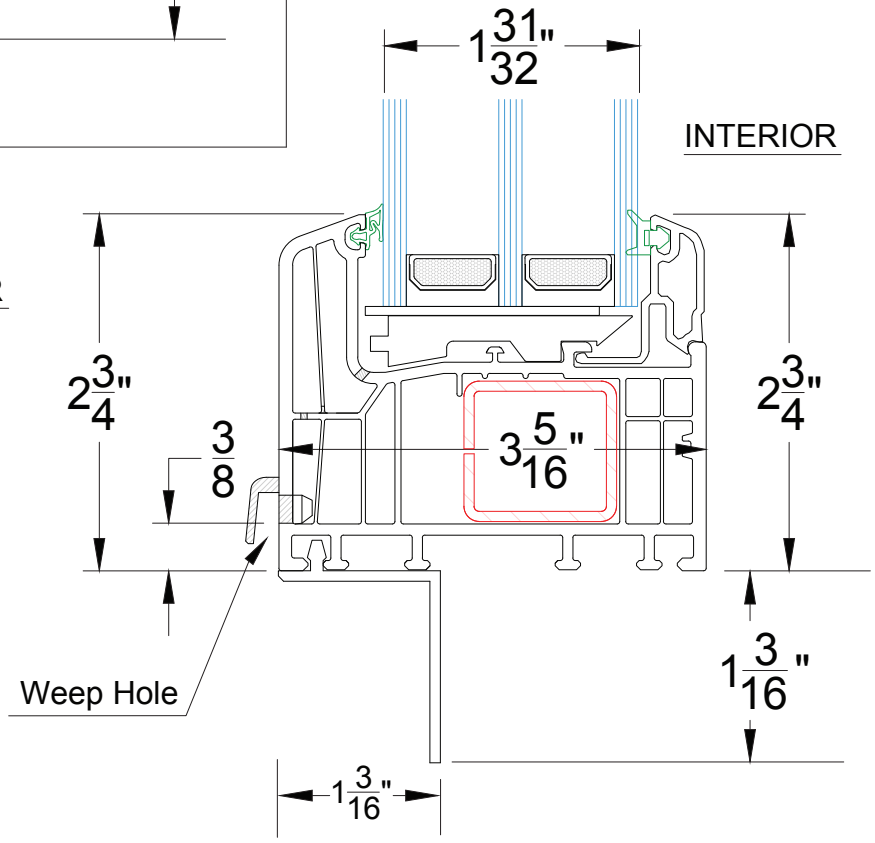

INTUS EFORTE WINDOW
WITH UST830 FLANGE